The Alpha Ruby™

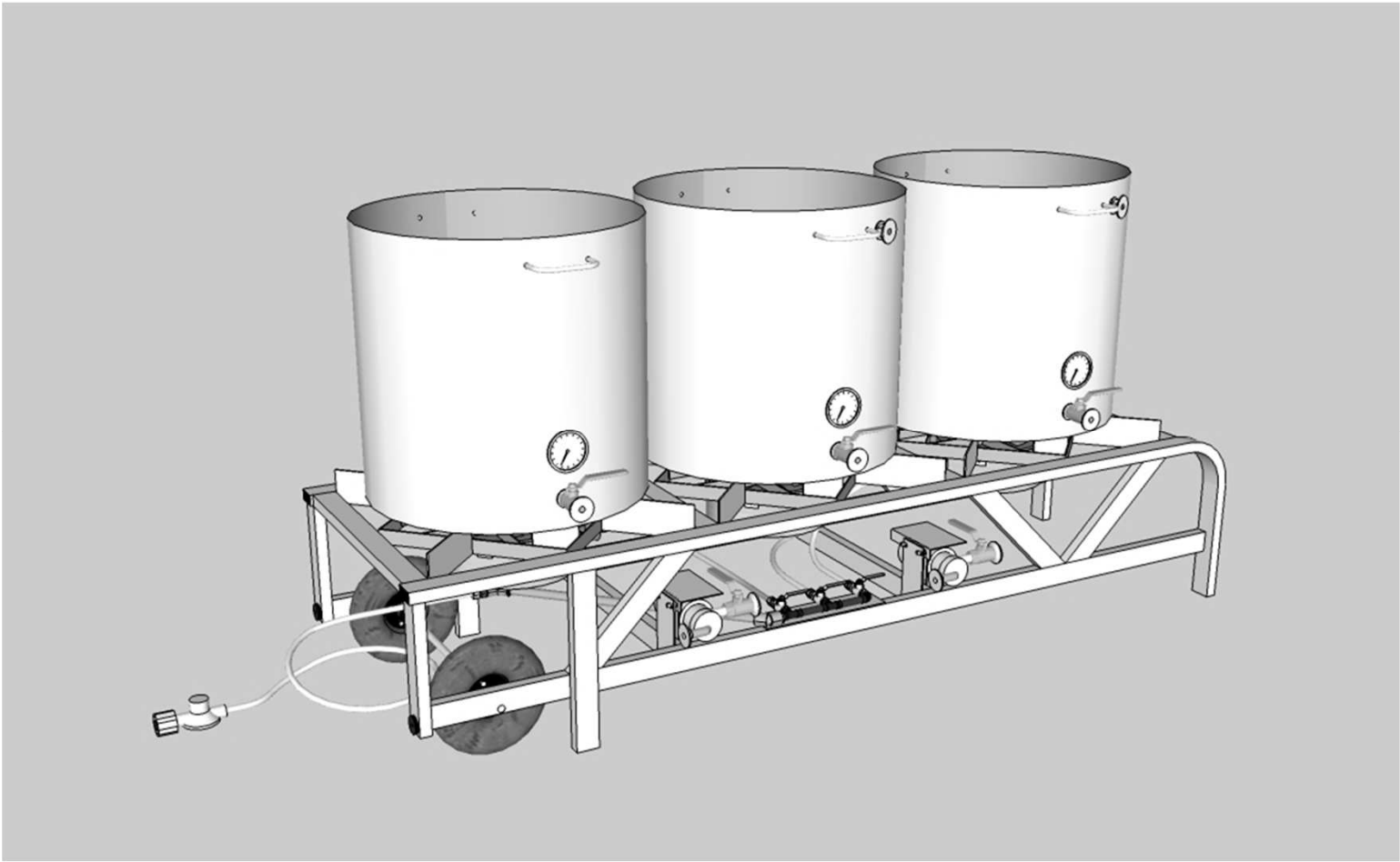

Owners Manual

Ruby Street Brewing, LLC
Fort Collins, Colorado
USA

Table of Contents

Introduction

Thank You for purchasing The Alpha Ruby™

Our machines are hand built and shipped almost completely assembled using high quality components and materials. All additional assembly can be accomplished by hand tightening with no tools required. With proper use and care, this equipment will provide many years of outstanding performance.

NOTICE!

Please review this manual in its entirety prior to any operation of this equipment

Failure to follow all manufacturer's instructions could result in serious personal injury and/or property damage.

Ruby Street Brewing, LLC assumes no responsibility for personal injury or property damage sustained by or through the use of this product.

If you have any questions or need assistance please contact us at:

Ruby Street Brewing, LLC
Fort Collins, CO

Email:
Questions@RubyStreetBrewing.com

SAVE THESE INSTRUCTIONS

Safety Instructions

WARNING: To Reduce the risk of serious injury, read the following important precautions before using The Alpha Ruby Brewery.

- It is the responsibility of the owner to ensure that all users of this equipment are adequately informed of all precautions.
- Use this equipment as described in this manual, do not use for anything other than its intended purpose.
- DO NOT USE INDOORS! This equipment must only be operated outdoors in adequately ventilated areas.
- The brewing structure must only be used on a level hard surface such as concrete. Do not use on a flammable surface or surface that could be damaged by moisture.
- Make sure that all 4 legs contact the ground evenly, and that the frame cannot rock or sway during use. Shim legs with solid material as needed to correct for uneven surfaces.
- Do not use under covered areas such as patio covers, porches, canopies, or under decks.
- Make sure that there are no flammable materials or substances near the brewery during operation.
- Inspect and tighten all parts before each use. Replace any parts that are worn or damaged immediately.
- Keep children and pets away from this equipment during use.
- DANGER! Water and Electricity Do Not Mix… Make sure that the pump motor is plugged into a GFCI protected circuit. If in doubt consult a licensed electrician before using.
- Do not touch the frame or place anything on the frame during operation, the frame areas around the kettles may become extremely hot.
- Use caution when lighting burners and always approach burner from underneath with long BBQ type lighter to avoid burns.
- Do not leave brewery unattended at any time during operation.
- Do not attempt to tilt or move the brewery unless all kettles have been removed, and gas regulator is disconnected from propane source.
- Always make sure that all gas valves are turned off before connecting propane regulator to source.
- Do not use in windy areas, as this will cause the burners to perform incorrectly and could cause damage to the frame.
- Never store a propane cylinder on the brewery frame.
- Never store a propane cylinder inside of a building or other enclosed area.

Brewery Overview

Familiarize yourself with all system components prior to assembly

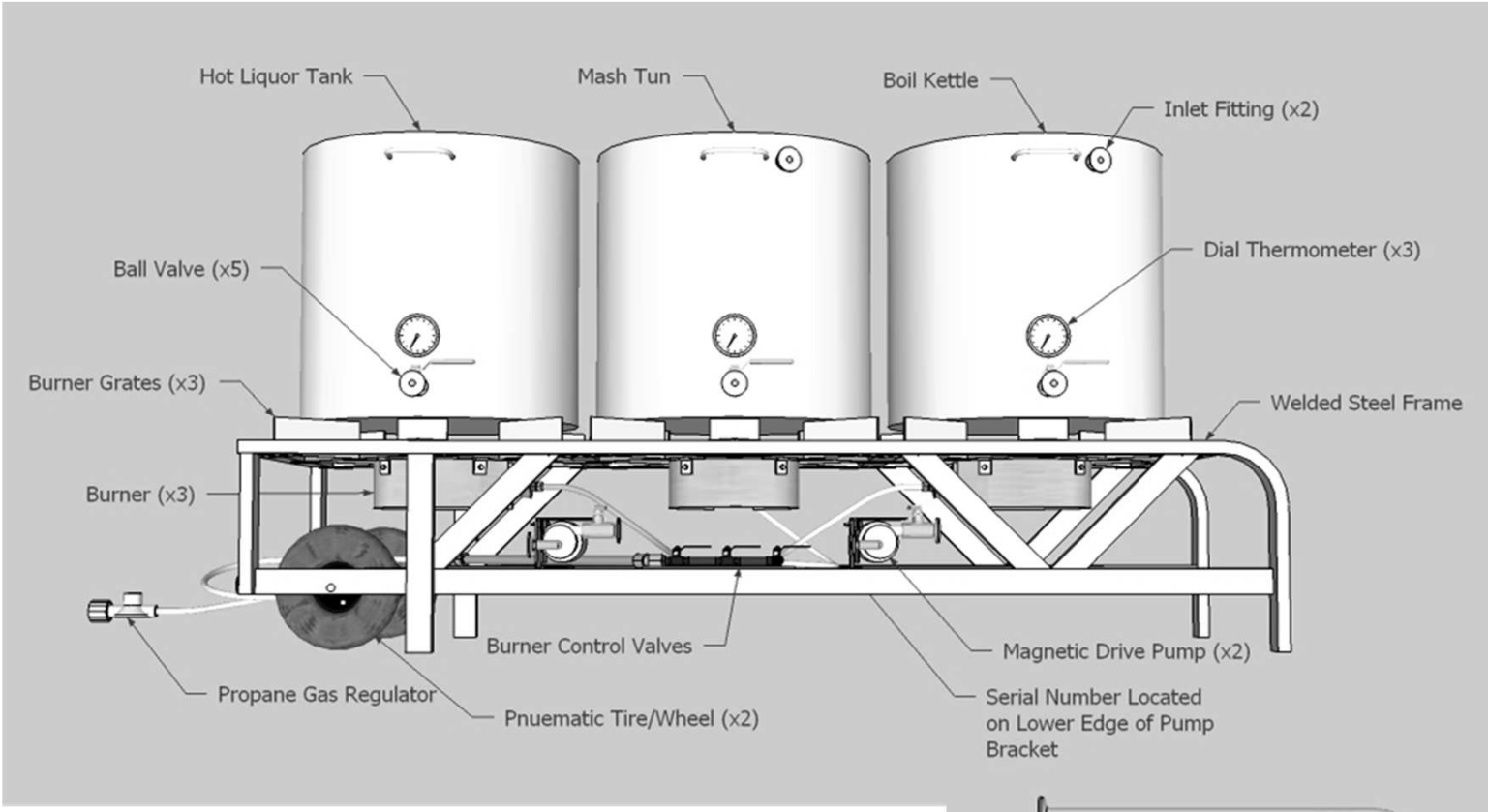

Our breweries are constructed with high quality solid stainless steel tri-clamp fittings. These fittings are extremely easy to clean and keep sanitary and offer a completely universal connection system. See illustration at right for proper assembly

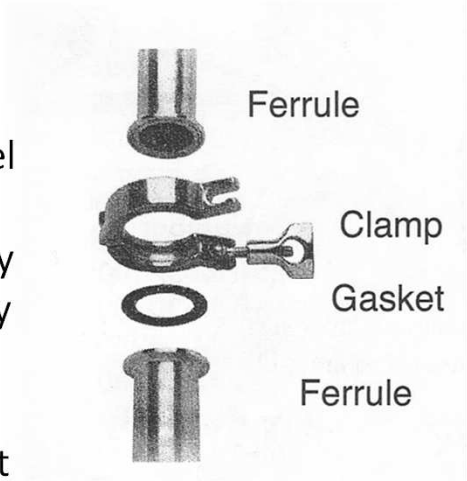

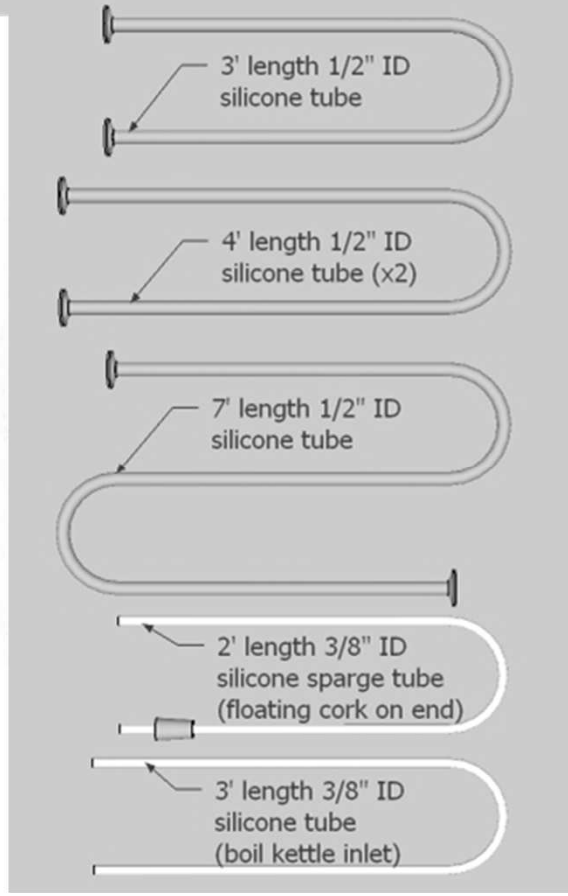

Kettle Assembly

Hot Liquor Tank

Please note that all 3 kettles are not the same. The hot liquor tank has only two holes, one for the valve and one for the thermometer. The mash tun and boil kettle have three holes, one for the valve, one for the thermometer, and one near the top for the inlet fitting. Make sure that you thoroughly clean and sanitize all kettles and components prior to use. We recommend using PBW™ or a similar product for this task.

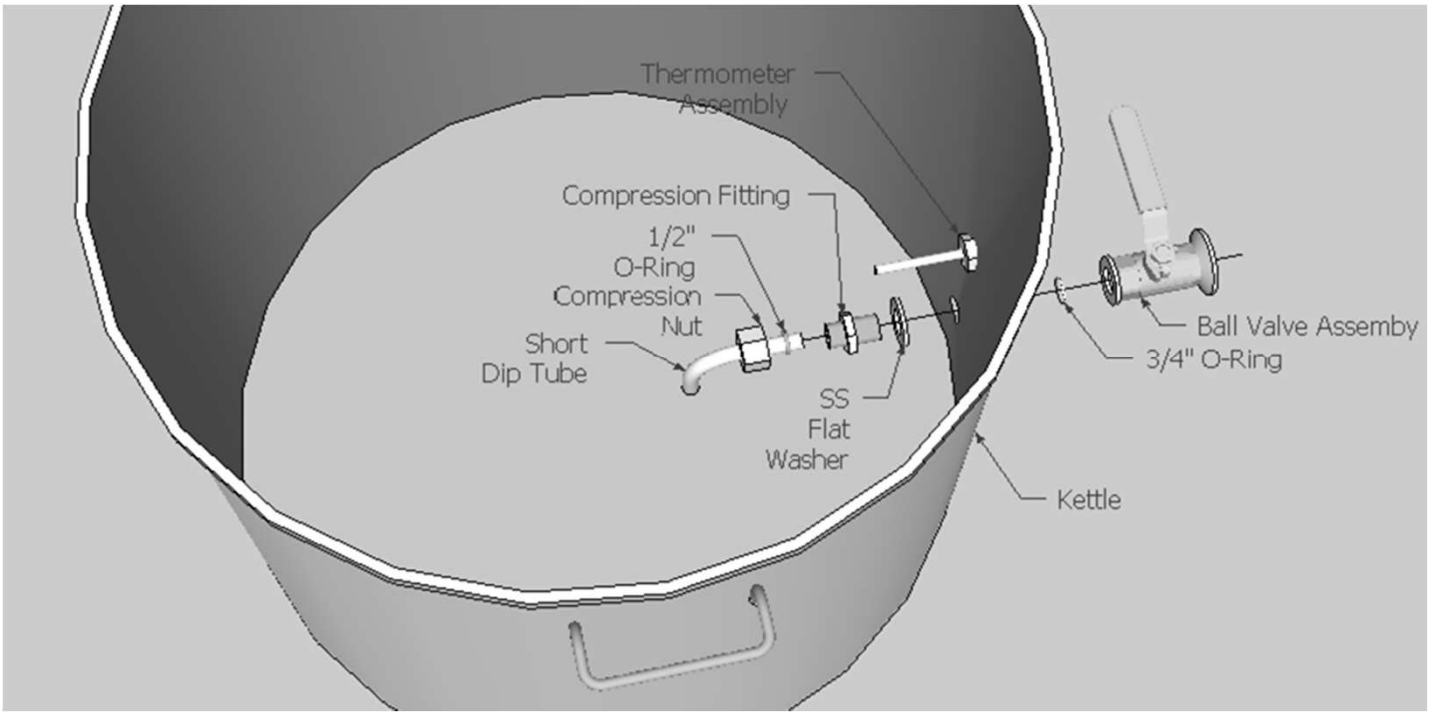

Step 1: Place (1) stainless steel flat washer over the longer threaded end of the included compression fitting

Step 2: Place the fitting and washer assembly through the hole from the inside of the kettle. While holding the fitting from the inside, slide the ¾" silicone O-ring over the threaded fitting end on the outside of the kettle.

Step 3: Install the valve onto the threaded fitting by screwing the fitting into the ball valve from the inside of the kettle. Tighten the fitting until the valve is firmly mounted. **Caution!** Twisting the valve assembly after the assembly has been tightened may damage the O-ring. Check for leaks prior to use.

Step 4: Slide the compression nut onto the longer end of the dip tube, followed by the ½" O-ring as illustrated above. Position the O-ring about approx. ¾" from the end of the dip tube.

Step 5: Hand tighten the compression nut onto to compression fitting while holding the valve assembly from the outside of the kettle.

Step 6: Refer to instructions included with the thermometer for proper thermometer installation.

Kettle Assembly

Mash Tun / Boil Kettle

Figure 1

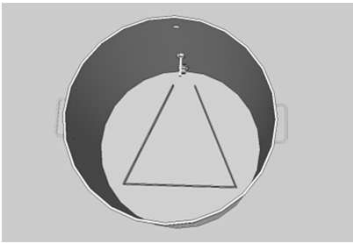

Figure 2

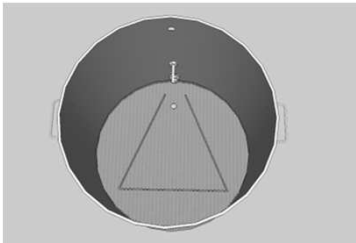

Figure 4

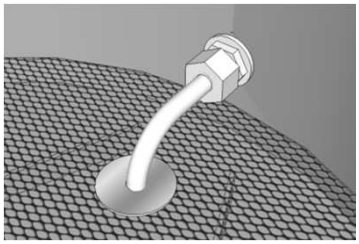

Figure 3

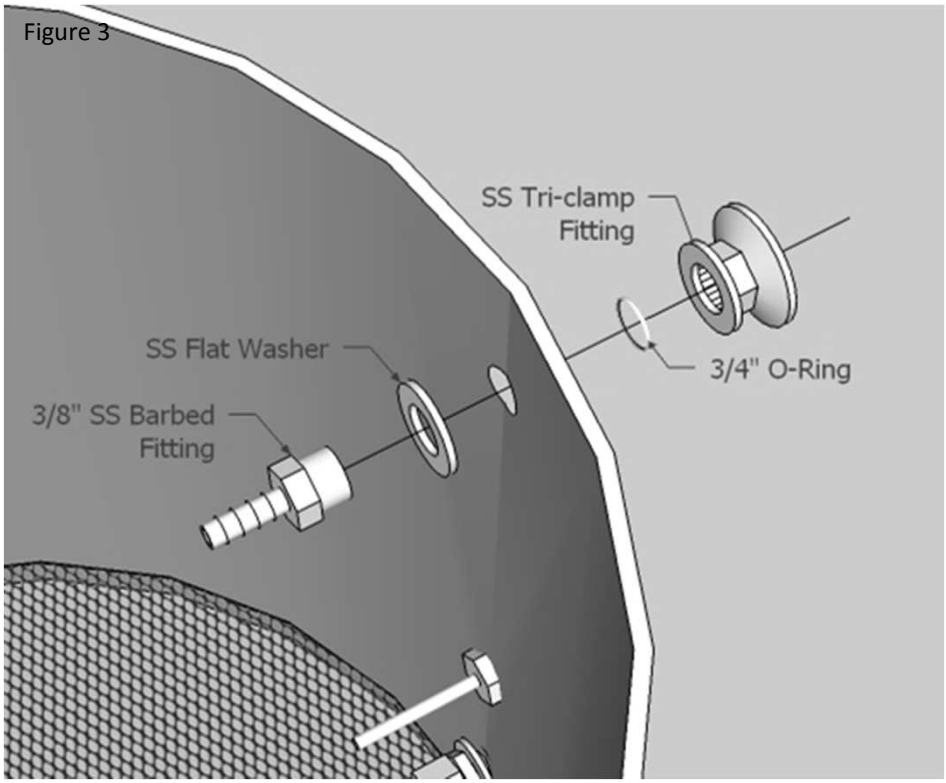

Step 1: Install ball valve assembly and thermometer by following Steps (1,2,3,6) on page 7

Step 2: Place the triangle shaped false bottom support into the bottom of the kettle with the open end facing the valve assembly (Figure 1)

Step 3: Insert the large perforated false bottom disk into the kettle so that it rests on top of the false bottom support. Make sure that the elongated hole in the false bottom is aligned with the valve assembly (Figure 2)

Step 4: Insert the dip tube assembly by placing the ½" SS washer over the large hole in the perforated false bottom (figure 4). Refer to steps 4 – 5 on page 7 for final dip tube assembly.

Step 5: Assemble the thru-wall sparge assembly by placing a flat washer onto the threaded end of the barbed fitting. Insert the fitting through the upper hole in the kettle wall from the inside. While holding the fitting from the inside, slide the ¾" silicone O-ring over the threaded fitting end on the outside of the kettle. Install the tri-clamp fitting onto the threaded fitting by screwing the fitting into the tri-clamp from the inside of the kettle. Tighten the fitting until the assembly is firmly mounted (Figure 3)

Kettle Placement

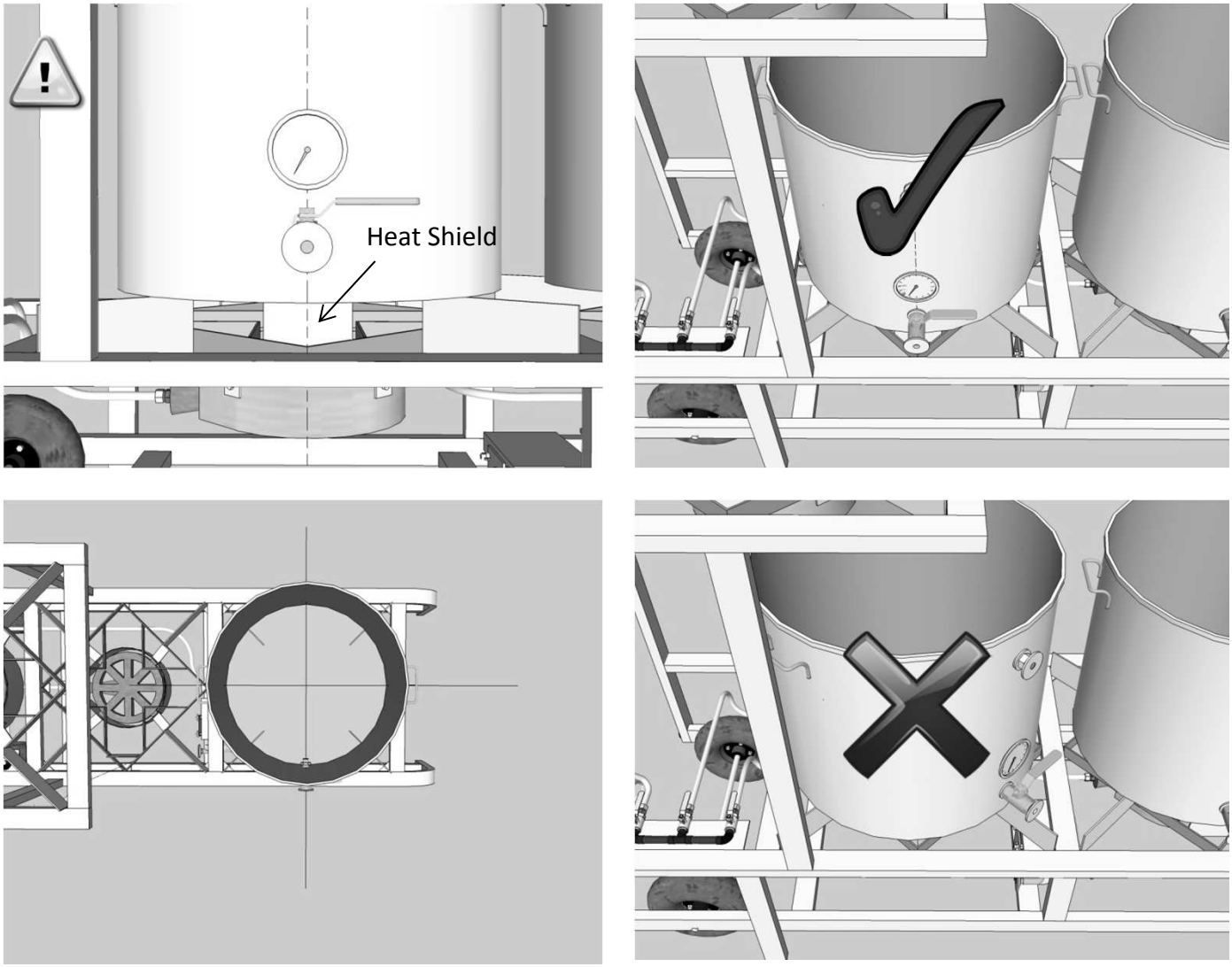

- Each burner grate is equipped with a welded heat shield designed to protect the valves and fittings on the kettles from damage due to heat or flame

- For the heat shield to work properly, it is imperative that each kettle be placed on the frame so that the valve is directly in front of and above the heat shield as shown above.

- Make sure that each kettle is centered over the burner grate so that all (4) of the support fins contact the kettles evenly before operation.

- Failure to properly center and align each kettle on the burner grates may result in damage to the valves, thermometers, and frame.

Operating Instructions

Figure 7

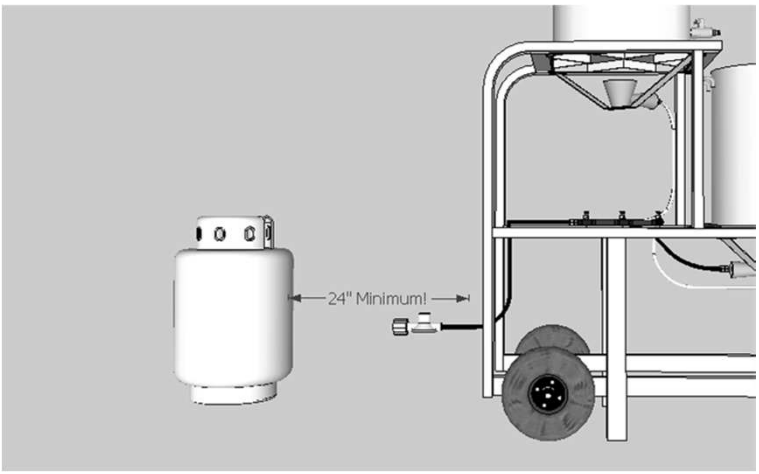

Figure 8

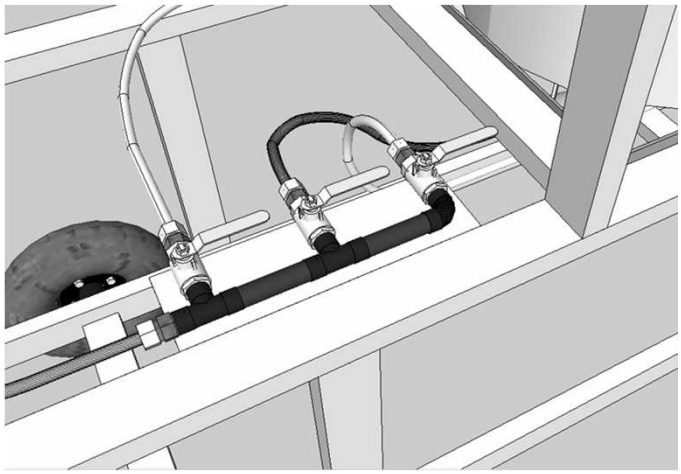

1. Place The Alpha Ruby™ outdoors on a flat and level surface that is non-flammable and cannot be damaged by moisture. Shim legs with solid materials if necessary to make sure that the brewery frame is level and cannot rock or sway. Make sure that there is not any type of material or structure above the brewery (porches, overhangs, canopies, etc.). Also confirm that the brewery is a minimum of 10' from any construction. This is a good time to confirm that your location also has good access to water and GFCI protected electricity for the pump motors.
2. Place a propane cylinder at the end of the brewery near the supply hose and regulator. Make sure that the cylinder is a minimum of 24" from any part of the frame (Figure 7). Confirm that all gas control valves are completely closed (Figure 8) prior to connecting the propane regulator to the supply cylinder (including the needle valve located on the propane regulator). Thread the propane regulator plastic nut onto the propane cylinder and tighten connection firmly by hand.
3. After the propane regulator is connected ALWAYS CHECK FOR GAS LEAKS prior to lighting burners. Open the propane cylinder valve approximately ¼ turn allowing gas to flow into the regulator body. Using a small brush or spray bottle, apply soapy water all around propane cylinder connection and regulator. Watch closely for any bubbles that appear indicating a gas leak. If you detect a gas leak at the connection, turn off cylinder valve and further tighten the regulator connection. DO NOT proceed with using this equipment if the gas leak cannot be stopped. After you are certain that there are no leaks, turn gas valve off at cylinder and wait 5 minutes before lighting any burners.
4. Test the operation of all burners prior to your brewing session. Make sure that there are no kettles or any other materials on the frame when testing burner operation (never heat an empty kettle, as this will damage the kettle). Again confirm that all gas valves are firmly in the off position (Figure 8). Very slowly open the cylinder valve completely. Next open the needle valve on the regulator to the full-open (counter-clockwise) position. The three burner control valve are sequenced in the same order as the actual burners (the left valve operates the left burner, the right valve operates the right burner, etc). Using a long BBQ style lighter, approach the burner from underneath while opening the appropriate gas valve about half-way. The burner should ignite immediately. If the burner does not ignite, close all valves, wait 5 minutes and repeat. Repeat this entire (step 4) process for remaining burners.

Brewing Instructions

Please note that these instructions are only intended to illustrate the basic use of this system and its components. We highly recommend that you read one of the many available books on all grain brewing procedure. Contact your brewing equipment supplier for recommendations. The following brewing scenario is based on a single step infusion mash using highly modified 2-row malt. Note that one of the benefits of our system having a direct fired mash tun is the ability to do more complex step and or decoction mashes. The direct fired mash tun also allows the brewer to perform a 170° F mash-out if desired. While the directions below are based on fly-sparging, batch sparging is also possible with this system and is becoming a popular alternative for many brewers.

1. Add cool clean water (strike water) to the mash tun at a rate of 1.25 quarts of water per pound of grain. At this time, add any water treatments as necessary.
2. Heat the strike water in the mash tun to the required infusion temperature. There are many online programs and even cell phone apps to help you calculate the correct strike water temperature. Generally the strike water temp range is around 165° – 169° F
3. Once the strike water has reached the target temperature, add the entire grain bill to the kettle all at once. Immediately stir until all grain is completely submerged and saturated. Using the kettle mounted thermometer, check the temperature of the mash. The temperature should be around 149° – 154° F. Stir the mash until the temperature reading stabilizes. Place a lid on the mash tun and leave undisturbed for 60 – 90 minutes.
4. While the mash is resting add cool clean water (sparge water) to the hot liquor tank at a volume of 2 gallons above your target runoff amount. Example: A 30 gallon batch requires an approximate 34 gallon run-off to account for losses during boiling. Therefore, you would start with about 36 gallons of sparge water. Generally this will leave you with enough left over hot water to use later for cleaning. Start heating the sparge water immediately after mashing in. Heat the sparge water to 170° F. You will occasionally need to reheat the sparge water kettle so the you maintain 170 ° water throughout the brewing process.
5. When the mash conversion rest is complete, remove the lid from the mash tun. Attach the short 2’ length of 3/8” ID silicone tubing to the barbed inlet fitting inside of the mash tun. Place the remaining tubing on top of the grain mash with the cork supporting the open end of the tubing.
6. Connect the 3’ length of tubing to the valve on the hot liquor tank and to inlet side of the left hand pump (refer to the tri-clamp fitting assembly illustration on the overview page of this manual, page 5).
7. Connect one 4’ length of tubing from the outflow valve on the left hand pump .
8. While holding the open end of the 4’ outflow tubing above the level of the Hot Liquor Tank, open the ball valve on the pump completely followed by opening the ball valve on the Hot Liquor Tank completely. This should allow the pump head to flood with water and at this point you should see liquid flow through the pump and into the beginning of the outflow hose. Do not start the pump. Once you have confirmed that the pump head is filled with liquid, close the outflow valve on the pump. **CAUTION!** Never operate the pump dry as this will damage the pump.
9. Once the pump has been primed, connect the open end of the 4’ tubing to the inlet fitting at the top of the Mash Tun.

Brewing Instructions (Cont)

10. Start the left pump by plugging into a GFCI protected outlet via extension cord. Slowly open the valve to allow sparge water to flow into the mash tun through the cork float sparge hose connected to the barb inside of the mash tun. Only allow enough water to flow into the mash in order to raise the level of the mash and liquid about 2” then close the pump valve and stop the pump.
11. Slowly stir the thinned mash using a long handled spoon or mash paddle for about 30 seconds being careful not to splash or incorporate air into the mash. Allow the mash to settle undisturbed for about 2 minutes.
12. Next Connect the second 4’ length of ½” ID silicone suction tubing from the valve on the Mash Tun, to the inlet fitting on the right hand pump. Now disconnect the first 4’ tube from the inlet fitting on the mash tun and set aside (The opposite end will remain connected to the left pump).
13. Connect the 7’ length of tubing to the outflow valve on the right hand pump.
14. While holding the open end of the 7’ outflow tubing above the level of the mash mixture, open the ball valve on the pump completely followed by opening the ball valve on the Mash Tun completely. This should allow the pump head to flood with liquid (beer wort) and at this point you should see liquid flow through the pump and into the beginning of the outflow hose. Once you have confirmed that the pump head is filled with liquid, close the outflow valve on the pump. **CAUTION!** Never operate the pump dry as this will damage the pump.
15. Connect the open end of the 7’ length of tubing to the inlet fitting at the top of the mash tun. You are now ready to begin recirculating the mash.
16. Start the right pump by plugging into a GFCI protected outlet via extension cord. Slowly open the outflow valve on the pump only until wort begins to circulate through the pump and gently onto the top of the grain bed (via the cork float tube). Make sure to keep the flow rate slow enough that it does not disturb the grain in the Mash/Lauter Tun.
17. Recirculating the liquid (wort) back into the Mash Tun helps establish a filter bed by pulling grain husks down onto the false bottom assembly. Continue slowly recirculating the wort until the liquid coming out of the cork float tubing has cleared and contains little or no grain particles. At this point, close the outflow valve on the pump and stop the pump.
18. Remove the top end of the long 7’ hose from the mash tun inlet fitting, and reconnect to the boil kettle inlet fitting. Inside the boil kettle connect a 3’ length of 3/8” ID silicone tubing to the barbed fitting and place the open end on the bottom of the kettle (inside)
19. The first 4’ length of tubing that you connected should still be attached to the outflow side of the left pump. Now connect the open end to the inlet fitting on the mash tun.
20. Confirm all connections are completed (3’ tubing from hot liquor tank valve to inlet of left pump, 4’ tubing from outlet valve of left pump to inlet fitting on mash tun, 4’ tubing from outlet valve on mash tun to inlet of right pump, 7’ tubing from outlet valve of right pump to inlet fitting on boil kettle).
21. Confirm that both pump outflow valves are closed and then completely open the valves on the hot liquor tank and mash tun.
22. Start both pumps by plugging into GFCI protected outlets via extension cord
23. Open the valve on the right pump slightly allowing beer wort to flow through the pump from the Mash/Lauter Tun and into the Boil Kettle. We recommend using a measured container to adjust this flow rate to about 2 – 2.5 quarts per minute.

Brewing Instructions (Cont)

24. Open the valve on the left pump slightly to regulate the flow of 170° F sparge water into the Mash Tun. Adjust this valve as needed to always maintaining a water level between ¼" and 1" on top of the grain bed (we do not advise allowing the water level to fall below the level of the grain).
25. Once you have 2-3" of wort in the bottom of the boil kettle, ignite the burner under the boil kettle and regulate at a level so the wort temp stays just below boiling. By doing this you will be able to boil immediately upon hitting target volume.
26. Continue the runoff process until you have collected the desired amount of pre-boil wort in your Boil Kettle (approximately 34-35 gallons for a 30 gallon batch). At this time, close the outflow valves on both pumps and disconnect power from the pumps.
27. Begin heating the Boil Kettle in order to bring the wort volume to a full boil. Be very careful to avoid a messy boil-over by stirring and reducing the burner output as liquid nears boiling temperatures.
28. Boil wort for a full 60 minutes following recipe guidelines for all hop additions, and any instructions regarding the addition of Irish Moss and or immersion chillers. Note that this system has a false bottom in the boil kettle which makes it perfect for using whole loose leaf hops!
29. While the wort is boiling disconnect the 7' tubing from the inlet fitting on the boil kettle and use the pump to transfer all of the remaining liquid out of the Mash Tun into a bucket or suitable drain. Once the grain bed has completely drained you can use a scoop to clean the grain out of the mash tun. Do not attempt to lift the mash tun from the frame with grain inside. The handles are only intended to lift empty kettles.
30. During the last 5 minutes or so of the boil, reconnect the 7' tubing from the outlet valve on the right pump to the inlet on the boil kettle. connect a 4' length of tubing from the valve on the boil kettle to the inlet of the right pump.
31. Open the valve on the boil kettle and start the pump by plugging into a GFCI protected outlet via extension cord.
32. Slowly open the outflow valve on the right pump about halfway allowing the wort to recirculate into the boil kettle. Recirculate the boiling wort through the pump and tubing for about 1 minute in order to completely heat sanitize the pump, valves, fittings, and tubing. **WARNING!** Be extremely careful not to allow the tubing end to come out of the kettle as the flow of boiling wort could cause severe burns. Do not touch the valve bodies, tri-clamp fittings, or pump head during this operation, as they will all be at boiling temperatures.

Brewing Instructions (Cont)

33. Upon completion of the wort boil the wort must be quickly chilled to yeast pitching temperature. There are several options for achieving this process. Please consult your brewing equipment supplier for recommendations.
    - **Immersion Chiller** – Insert chiller coil into boiling wort 15 minutes before the end of the boil to sanitize. Upon boil completion, connect inlet and outlet water hoses to coil fittings and run water through coil until desired wort temperature is reached (generally 70° F). Note that constantly moving the coil during cooling and or recirculating wort through pump and back into the top of the boil kettle will accelerate the cooling process. Upon attaining the desired temperature, use the outflow tube from the pump to transfer cooled wort into a suitable fermenter(s).
    - **Plate Chiller / Counterflow Chiller** – Attain proper fitting to adapt the outflow tube from the pump to the wort inlet connection on the plate or counterflow chiller. Properly sanitize the chiller according to manufacturers recommendations prior to use. Connect inlet and outlet water hoses to appropriate chiller fittings. Using the pump to transfer the wort from the Boil Kettle to a suitable fermenter(s), adjust the flow of the cooling water and or pump outflow to achieve the desired temperature into the fermenter(s).
34. Pitch yeast according to manufacturer's recommendations and seal fermenter with appropriate airlock or blow off tube assembly.
35. After brewing is complete, remove any remaining grain and or hops from kettles and spray out with garden hose. Place the kettles back on the brewery frame for further cleaning. Use remaining hot water from Hot Liquor Tank to make a brewery wash solution using a product such as PBW™. Connect the pumps and tubing so that this solution gets thoroughly circulated through all fittings, valves, tubing, and pump heads. After circulating wash solution, make sure that all kettles, fittings, valves, tubing, and pump heads get flushed with clean water.
36. Make sure to empty all liquid from the pumps by separating the pumps from the pump brackets by removing the two stainless steel wing nuts. Hold the pumps at several different angles and shake gently to ensure that no liquid remains trapped within the pump heads.
37. Dry all kettles and kettle components immediately to prevent water spots.

Care and Storage

Properly cleaning, maintaining, and storing your Alpha Ruby™ and related components will ensure many years of trouble free operation.

• Frame – The frame has a highly durable powder coated finish. The frame should only be cleaned with a soft cloth using a mild solution of dish soap and water. Never use alcohol, paint thinners, or any other solvents on the frame. Do not use abrasive pads or cleaners on the frame. In the event that the frame finish becomes chipped or damaged exposing bare metal, use an automotive grade touch up paint to refinish the compromised area in order to prevent rust formation. Please note: some discoloration of the frame finish around the burner grates is normal.

• Burner Grates – The burner grates on your Alpha Ruby™ have been finished with a very high temperature paint. However; it is normal for some burn off to occur where there is direct flame exposure. To ensure that rusting does not occur, we recommend wiping **COOLED** burner grates down with a light coat of vegetable oil after each use.

• Kettles – Kettles and related stainless steel components should be cleaned before and after each brewing session. Kettles should be cleaned with a soft cloth and mild soap. **DO NOT EVER USE STEEL WOOL** or soap filled pads on stainless steel components or kettles as this will cause excessive rust. For stubborn or hard to clean residue, a synthetic scrubbing pad can be used (note that this may dull the finish of your kettles). After cleaning, kettles and components should be rinsed with clean water and dried immediately to prevent water spotting.

• Tubing, O-rings, and Gaskets – Your brewery includes high quality silicone tubing, O-rings, and gaskets for all liquid connections. All silicone tubing and parts should be rinsed with a brewery wash solution prior to and after brewing, then thoroughly flushed with clean water. Tubing should be stored hanging with open ends downward so that all moisture will drain out. If you notice that the tubing has become sticky or if you identify any small tears on the exterior surface of the tubing, O-rings, or gaskets, replace immediately. Contact your brewing equipment supplier for replacement silicone parts. Some discoloration of the silicone accessories is normal (especially when using iodine based sanitizers).

• Pump and Valves – Pump head and valves should be flushed with a brewery wash solution prior to and after brewing, then thoroughly flushed with clean water. Make sure that no liquid is left in the pump head by separating the pump from the pump bracket by removing the two stainless steel wing nuts. Hold the pump at several different angles and shake gently to ensure that no liquid remains trapped within the pump head. All valves should be left at the 45° half open position during storage (this ensures that no moisture becomes trapped within the valve ball or in the housing surrounding the valve ball).

• Storage – We recommend storing your Alpha Ruby™ indoors when not in use. If the brewery is stored outdoors make sure that it is well covered and protected to ensure that it does not become damaged due to excessive sunlight and or moisture.

• Upright Storage – Due to weight and size of Alpha Ruby frames, we DO NOT recommend storing frames on end.

Parts List

Part #	Description	Qty Req.
1	Welded Steel frame	1
2	Burner Grate	3
3	Axel	1
4	10" Pneumatic Wheel	2
5	5/8" Flat Washer	2
6	Cotter Pin	2
7	1/4" x 3/4" SS Bolt	4
8	1/4" SS Nut	10
9	1/4" SS Wing Nut	4
10	Plastic Tubing Cap	8
11	3/4" Rubber Bumber	2
12	Rubber Glides	2
13	1/2" Plastic P-Clip	1
14	3/4" Insulated P-Clip	1
15	Vinyl Graphic 'Alpha'	1
16	Vinyl Graphic 'Website'	1
17	Vinyl 'Caution Hot'	1
18	Vinyl 'Read Manual'	1
19	10" Burner	3
20	Brass Orifice	3
21	Hose / Regulator	1
22	Valve Manifold Assembly	1
23	Gas Line (Center Burner)	1
24	Gas Line (Right and Left)	2
25	Thermometer Assembly	3
26	Welded Ball Valve Assembly	3

Part #	Description	Qty Req.
27	1/2" Ball Valve SS (2 PC)	2
28	1.5 TC x 1/2 Male NPT	5
29	1.5 TC x 1/2 Female NPT	4
30	1.5 TC x 1/2 Barb	8
31	1.5 TC Clamp	8
32	1.5 TC Silicone Gaskets	9
33	1/2" Silicone Tubing Pr Ft	18
34	3/8 Silicone Tubing Pr Ft	5
35	Black Cable Tie	18
36	Dip Tube Short	2
37	Dip Tube Long	1
38	Compression Fittings	3
39	Large O-Ring	6
40	Small O-Ring	6
41	1/2" NPT x 3/8" Barb SS Fitting	2
42	SS Flat Washers	5
43	SS Flat Washer 1/2" x 2"	1
44	Cork	1
45	Magnetic Drive Pump	2
46	Pump Shield	2
47	180 Qt Kettle (BK)	3
48	180 Qt Kettle (HLT)	1
49	180 Qt Kettle (MT)	1
50	False Bottom Disk (Large)	1
51	Domed False Bottom	1
52	False Bottom Support	1

Parts List

Frame Assembly

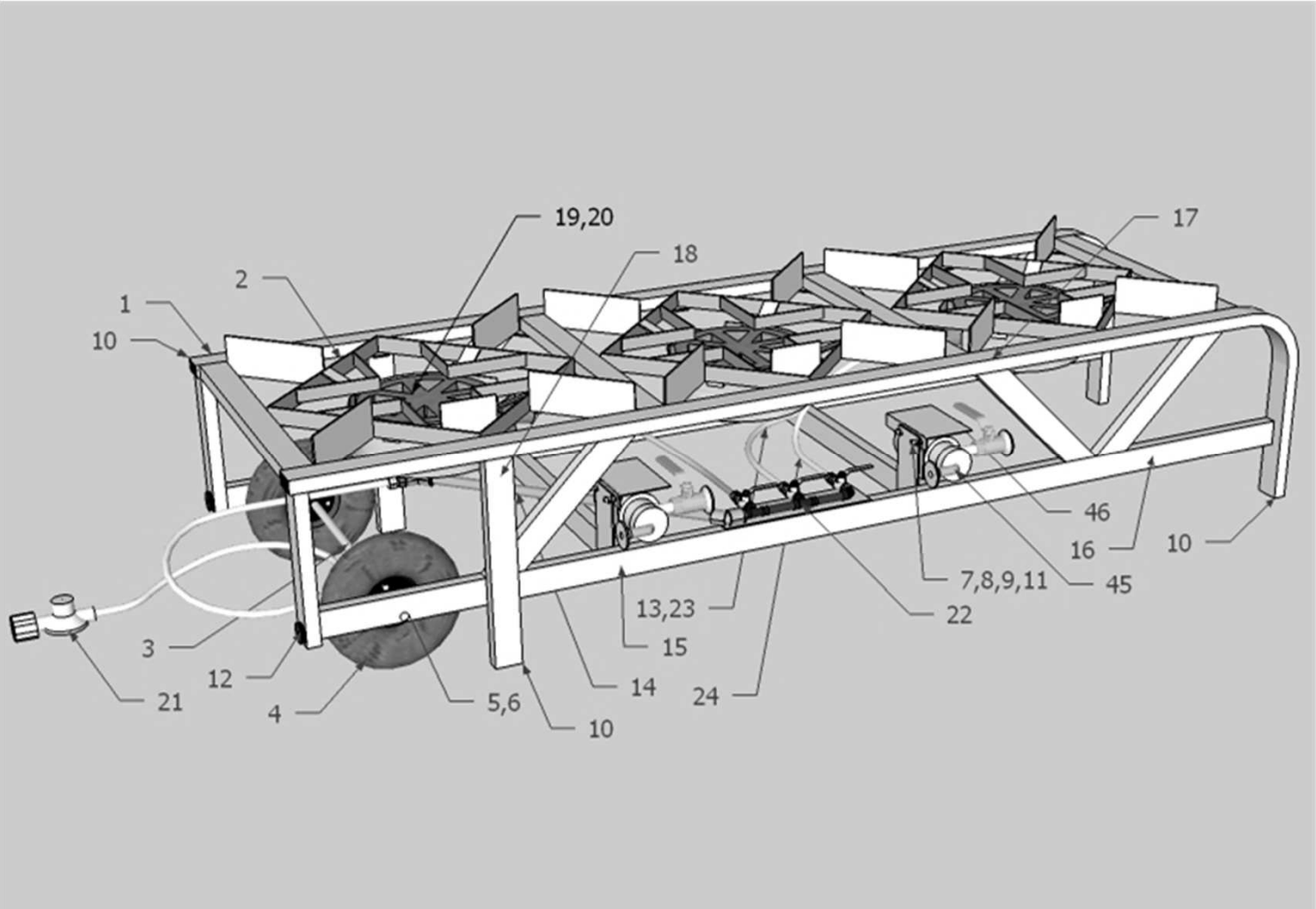

Ordering Replacement Parts:

To order replacement parts, simply email your request to:
Orders@RubyStreetBrewing.com
Include part number, description, QTY, and serial number of your machine (located on bottom edge of pump bracket). We will respond with pricing and a shipping quote.

Parts List

Pump Assembly

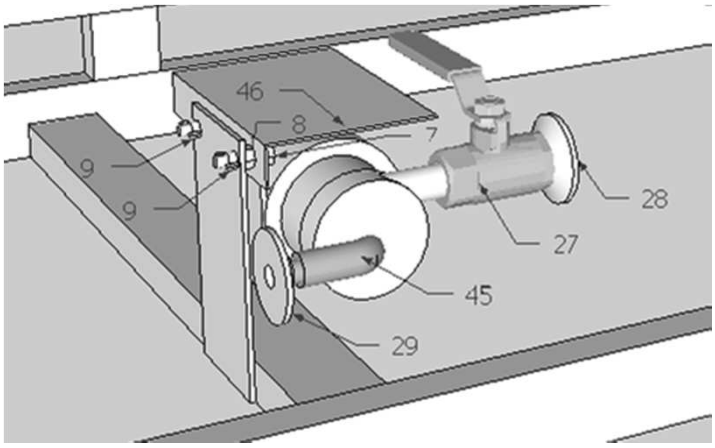

Mash Tun

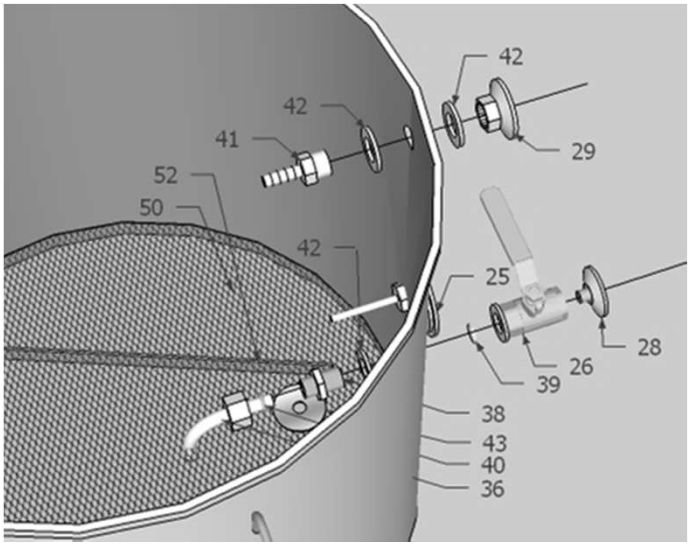

Boil Kettle

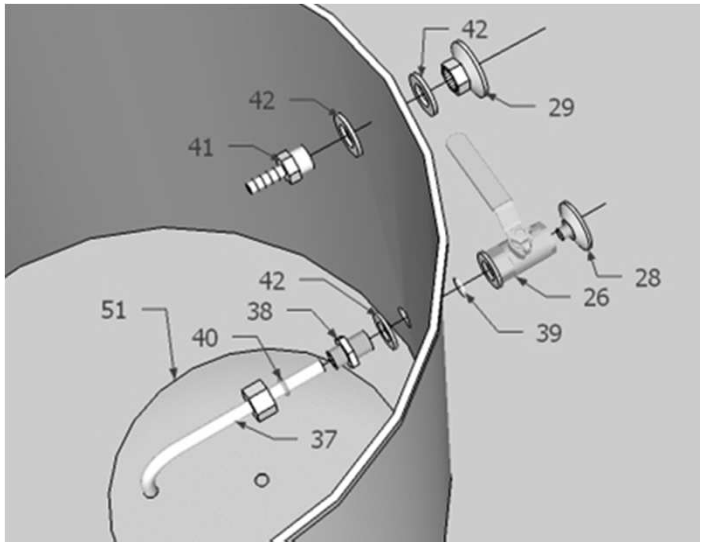

Hot Liquor Tank

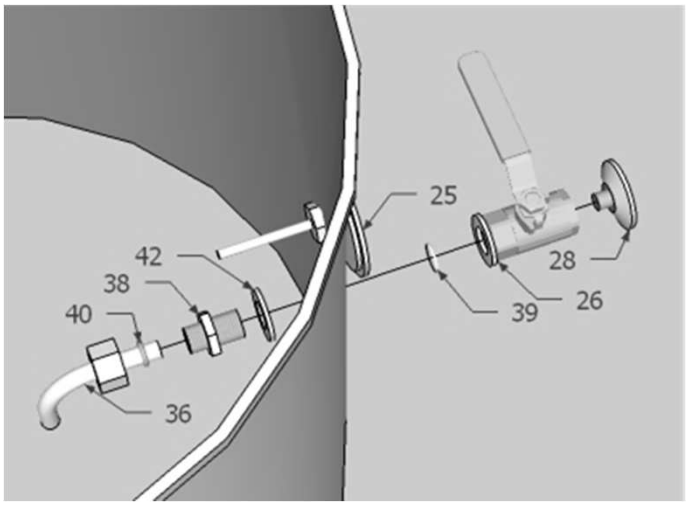

Limited Warranty

Ruby Street Brewing, LLC warrants this product to be free from defects in workmanship and material, under normal use and service conditions for one year from the date of purchase. This warranty extends only to the original purchaser. Ruby Street Brewing, LLC's obligation under this warranty is limited to replacing or repairing at Ruby Street Brewing, LLC's option. All repairs for which warranty claims are made must be pre-authorized by Ruby Street Brewing, LLC. This warranty does not extend to any product or damage to a product caused by or attributable to freight damage, abuse, misuse, improper or abnormal usage, or repairs not provided by Ruby Street Brewing, LLC authorized service personnel. Specifically excluded are damages caused by or attributable to the following incidents: Any damage to the frame , kettles, or components attributable to improper handling or freight damage; damage resulting from improper storage; damage to the pump, motor, plumbing, and components due to improper maintenance; or damage resulting from failure to properly follow owners manual operating and maintenance instructions. Excluded are components that are subject to replacement due to normal wear including but not restricted to silicone tubing, o-rings, and gaskets. The warranty also excludes any deterioration, burning, or discoloration of the applied finish on the frame and or burner grates. No other warranty beyond that specifically set forth above is authorized by Ruby Street Brewing, LLC.

Ruby Street Brewing, LLC is not responsible or liable for indirect, special or consequential damages arising out of or in connection with the use or performance of the product or damages with respect to any economic loss, loss of or damage to property including water damage, fire damage, loss of revenues or profits, loss of use, or other consequential damages of any nature. Some states do not allow the exclusion or limitation of incidental or consequential damages. Accordingly, the above limitation may not apply to you.

This warranty gives you specific legal rights. You may also have other rights which vary from state to state.

Ruby Street Brewing, LLC, Fort Collins, CO